SATIN

PEH10 160IN

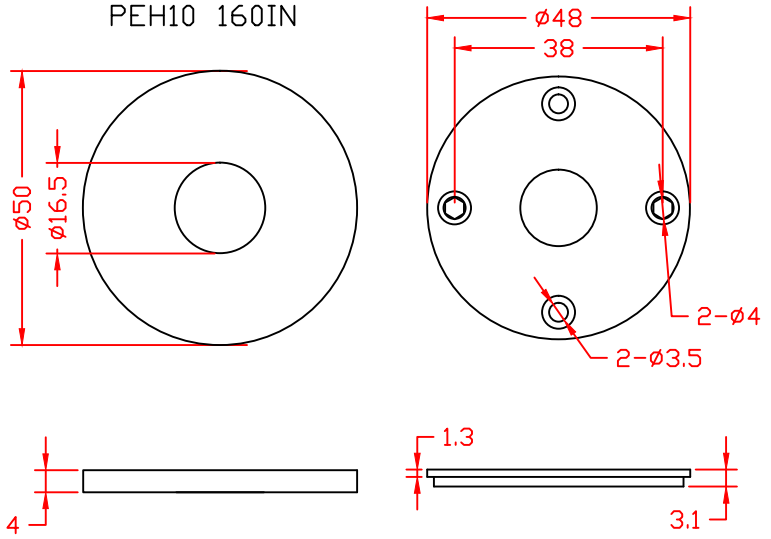

SATIN (16.5MM MIDDLE HOLE)

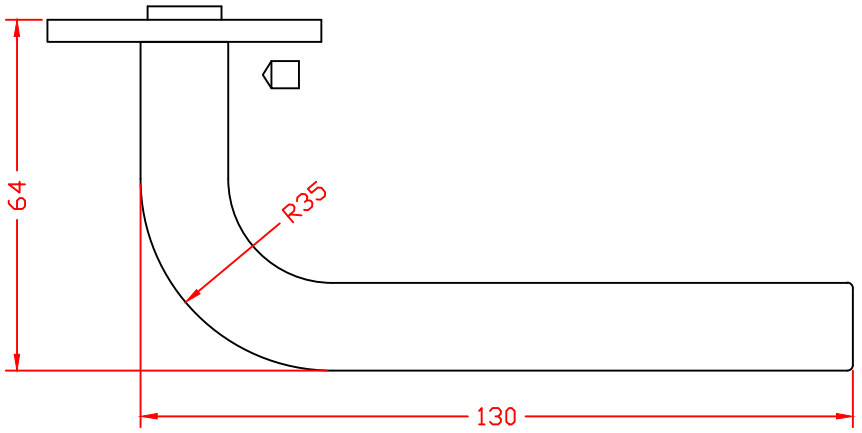

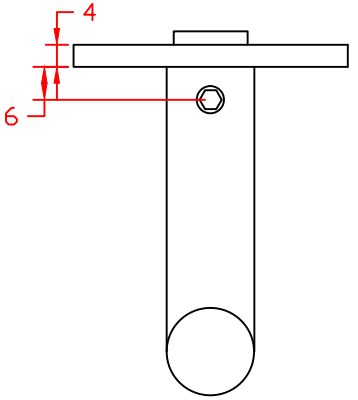

PEHA®

LAST UPDATE: 21/MAY/2018

PEH02 1002IN